Bridge Across Meethi Khadi Near Dumbhal tenement

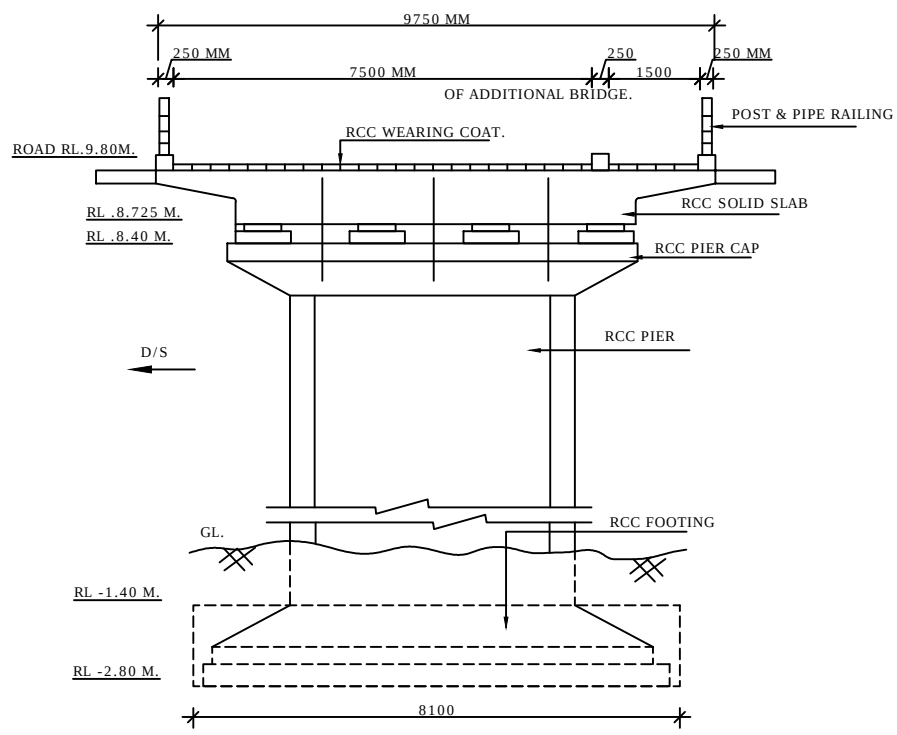

CROSS SECTION

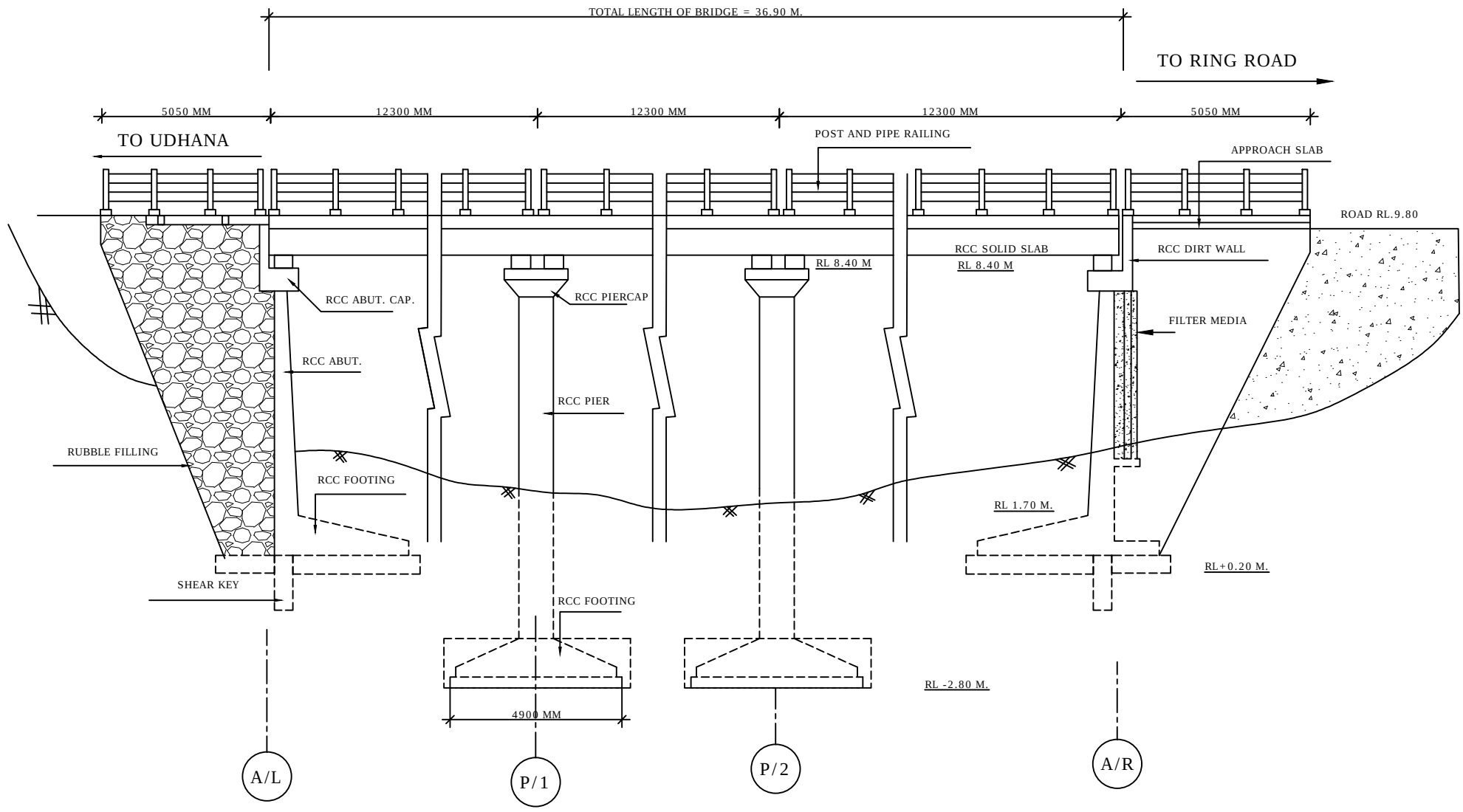

SECTIONAL ELEVATION